MPX-E

Explosion Proof Magnetostrictive Level Sensor

The MPX Series Magnetostrictive Level Sensor provides highly accurate repeatable level readings in a wide variety of liquid level measurement applications. The MPX-E's light-weight design allows it to be used in applications where space is limited. The MPX-E carries Class I, Division 1 & 2 and Class I, Zone 1 & 2 approvals for use throughout North America.

FEATURES

- Low-Level Fuel-Water Interface Detection
- Hazardous Area Certification
- RS485 Modbus RTU and 4–20 mA Outputs
- Durability & Longevity
- Comprehensive Measurement
- Measures up to 12.75 ft.
- Remote Monitoring Capabilities

COMMON APPLICATIONS

- CI, D1 Hazardous Locations
- Storage Tanks
- Fuel Tanks
- Oil/Water Interface Measurement
- Industrial Effluent
- Power Generation
- Water & Wastewater Treatment
- Biotech
- Oil & Gas
- Petrochemical
- Chemical

Doc# 9004570 | Part# 125816-0019
Rev. K | 3/2026

Automation Products Group, Inc. | +1 (877) 373–5940 | sales@apgsensors.com | apgsensors.com

MPX-E SPECIFICATIONS

SMALL HOUSING

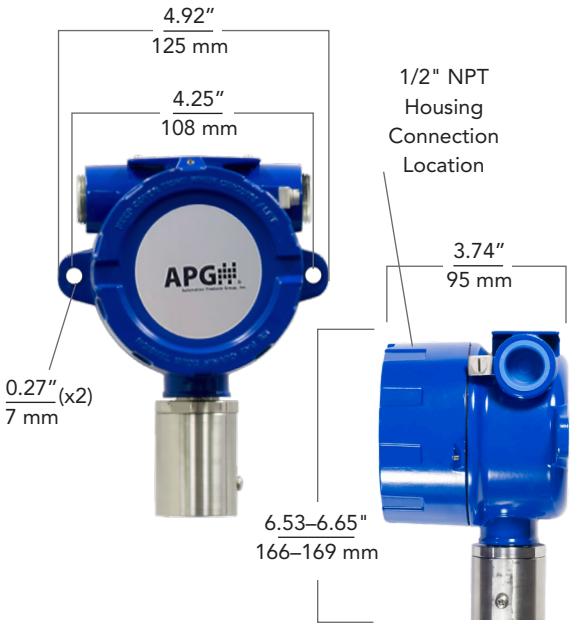

LARGE HOUSING

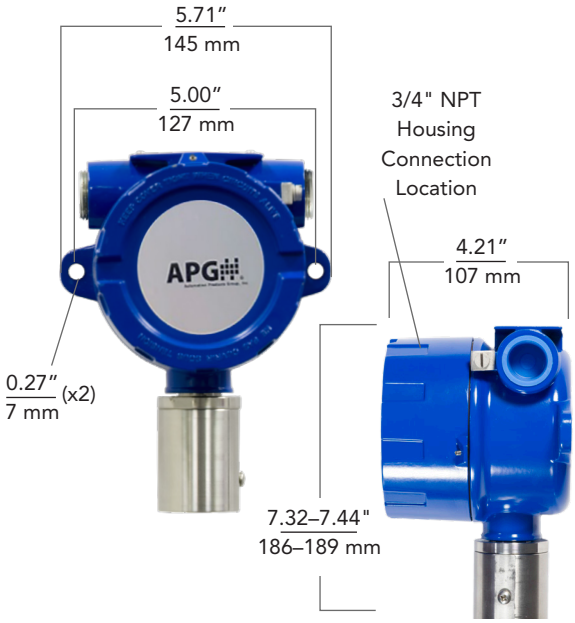

PERFORMANCE

- **Resolution:**
  4-20 mA: 14 bit DAC (1 mm)
  Modbus: 0.04 in. (1 mm)
- **Distance Accuracy:**
  4-20 mA Modbus: Greater of ±0.05% of FS or 1 mm
- **Temperature Accuracy:**
  RTD—1k Ohm: ±1°C

CONNECTIVITY

- **Output:**
  Single or dual loop-powered 4-20 mA
  Set points:
    4 mA, probe bottom
    20 mA, 6 in. below probe zero point or at customer specified point
  Modbus RTU (RS-485), optional temperature output

ENVIRONMENTAL

- **Probe Operating Temperature:** -40°C–85°C (-40°F–185°F)
- **IP65**

PHYSICAL

- **Housing:** Cast aluminum, epoxy coated, blue
- **Stem:** 0.5" Ø 316L SS
- **Stem Length:** 1–12.75 ft. (0.3–3.9m)

ELECTRICAL

- **Electrical Connection:** Terminal Block, 12–24 VDC
- **Typical Current Draw:**
  4-20 mA: (single) 4-22 mA, (dual) 8-44 mA
  Modbus (RS-485): 25 mA
- **Reverse Polarity Protection**
- **Surge Protection (Output 4 only)**

PROGRAMMING

- **RS-485:**
  APG Modbus Scout (SCT-1)* — Modbus to Bluetooth adapter
  APG Settler & Explorer* — Online control and datalogging
- **4-20 mA:**
  RST-4100 programming module*
  APG Settler & Explorer* — Online datalogging

**Optional Accessory*

CERTIFICATION

- **CSA:**
  Rated 12-24 VDC; 4-20 mA or 80 mA: Ta 85°C
  Class I, Division 1 & 2, Groups C & D T4
  Ex d IIB T4
  Ex nA IIB T4
  Class I, Zone 1: AEx d IIB T4
  Class I, Zone 2; AEx nA IIB T4

Automation Products Group, Inc. | (435) 753 7300 | sales@apgsensors.com | apgsensors.com

MPX-E FLOATS

FLOATS A, B

FLOAT A1, A2

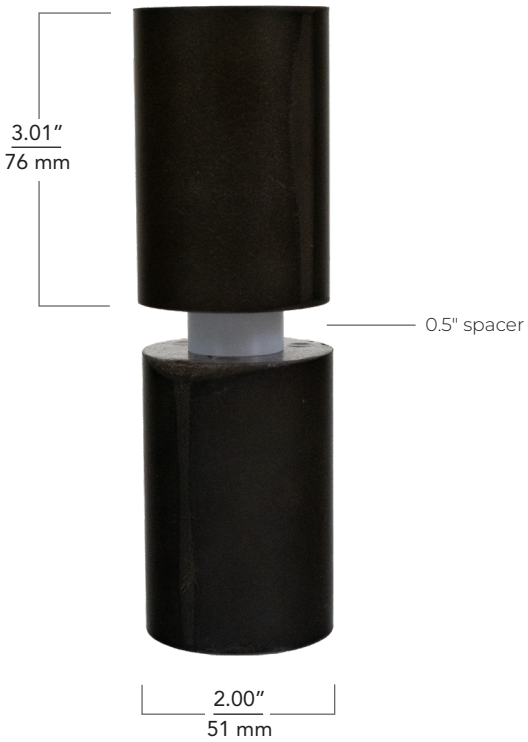

FLOATS C, D

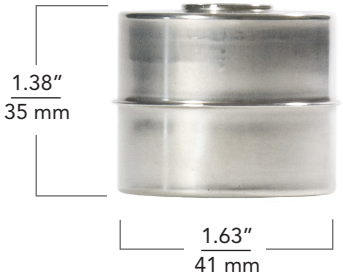

FLOAT E

FLOAT F

PRECISION & CONSISTENCY

Delivers highly accurate and repeatable readings, crucial for precise tank level monitoring and interface detection between liquids.

DURABILITY & LONGEVITY

Rugged design measures up to 12.75 feet (3.9 m), ensuring reliable performance in diverse industrial environments with minimal maintenance.

COMPREHENSIVE MEASUREMENT

Enables dual level (interface) measurement and calculates tank volumes using strapping tables, supporting accurate inventory management and operational planning.

VERSATILE OUTPUT INTEGRATION

Offers 4-20 mA and RS-485 (Modbus RTU) outputs for seamless integration into PLCs, SCADA systems, and industrial automation platforms.

HAZARDOUS AREA CERTIFICATION

Certified for Class I Division 1 Groups C & D, Class I Zone 1, and Class I Zone 2, ensuring safe operation in hazardous environments with combustible gases or vapors.

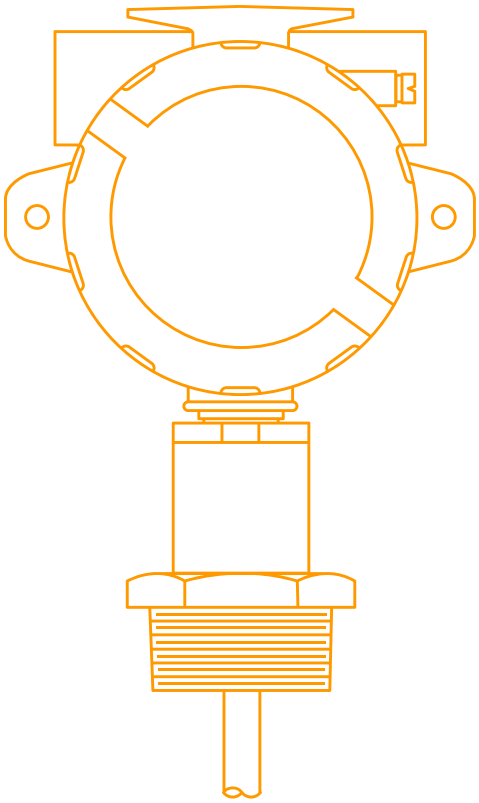

Automation Products Group, Inc. | (435) 753 7300 | sales@apgsensors.com | apgsensors.com

MODEL CONFIGURATION OPTIONS

MODEL NUMBER: MPX – E ____ ____ – ____ ____ – ____ ____ ____ ____ – ____ – ____
(A B C D E F G H I J K)

A. Stem Type

- ☐ E — 0.5 in. diameter 316L SS

B. Output

- ☐ 2 — Single float, 4-20 mA (loop powered, 2 wire)
- ☐ 3 — Dual float, 4-20 mA (loop powered, 3 wire)
- ☐ 4 — RS485 Modbus RTU, surge protection

C. Housing Type

- ☐ __* — Large Housing
- ☐ A** — Small Housing

D. Float 1 (Top Float)

- ☐ A — 316L SS Round (0.65 SG)
- ☐ B — 316L SS Round (0.92 SG)
- ☐ C — 316L SS Cylindrical (0.65 SG)
- ☐ D — 316L SS Cylindrical (0.92 SG)
- ☐ E — Buna-N (0.5 SG)
- ☐ F — 316 SS 3A Cylindrical (0.5 SG)
- ☐ A1/A2 — 2D x 3H Buna-N Low Level Floats (0.36 SG/0.94 SG)

E. Float 2 (Optional)

- ☐ N — None
- ☐ B*** — 316L SS Round (0.92)

F. Mounting Type

- ☐ P* — NPT Plug 150#
- ☐ N — None

G. Mounting Size

- ☐ 1.5 — 1.5 in. (welded or slide connection)
- ☐ 2* — 2 in. (welded or slide connection)
- ☐ 3 — 3 in. (slide connection only)
- ☐ N — None

H. Mounting Connection

- ☐ W — Welded (fixed)
- ☐ S — Slide with Compression Fitting (adjustable)

I. Stem/Finish Material

- ☐ B — 316L SS

J. Total Stem Length in Inches

- ☐ __ — Min. 12 in. – Max. 153 in.

K. Optional Temperature Sensor

MPX-E4

- ☐ N* — None
- ☐ T — Stem RTD, 1 KΩ, 6 in. from the bottom of the probe

*Note: This option is standard
**Note: Small housing only available with Modbus RTU (Output 4)
*** Note: Float 2 option B requires Float 1 option A

MPX ACCESSORIES

Please order separately, by part number.

Description	Part Number
Programming Module	
RST-4100 (4-20 mA: MPX-E2, MPX-E3)	125759
Modbus Scout (SCT-1) (RS485 MPX-E4 only)	125424-0001
Settler	125422-000x
Note: Each module is sold with 6 ft. USB cable	

Disclaimer: Please note that selecting certain options may limit or eliminate the availability of other options, as some floats and accessories are only compatible with a select number of configurations. For further configuration assistance, please contact our sales team at +1 (877) 373–5940.

SETTLER

Your Gateway to Smarter Monitoring

Settler, APG's next remote monitoring gateway, makes getting real-time level data easier than ever.

Settler seamlessly connects Modbus and 4-20 mA sensors—transmitting encrypted data securely to Explorer, APG's cloud-based interface. View tank and well levels anytime, anywhere, with reliable Ethernet connectivity and robust data security powered by MQTT with AES (Advanced Encryption Standard). Plus, with over-the-air (OTA) firmware updates, your system stays up to date without hassle.

Designed for general-purpose environments, Settler is not intended for use in hazardous areas.

Explorer makes monitoring simple. Access real-time readings, enable datalogging, and set up alarms so you're always informed of critical changes—right from your smartphone, tablet, or desktop.

Save time, reduce costs, and gain peace of mind with remote monitoring powered by Settler and Explorer. Contact us today to learn more or visit apgsensors.com/ settler-remote-monitoring-gateway/.

APG
Automation Products Group, Inc. | (435) 753 7300 | sales@apgsensors.com | apgsensors.com